T620W
T630W

6A SNUBBERLESS™ TRIAC

MAIN FEATURES

Symbol	Value	Unit
$I_{T(RMS)}$	6	A
V_{DRM}/V_{RRM}	600 and 800	V
I_{GT}	20 to 30	mA

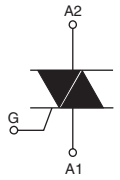

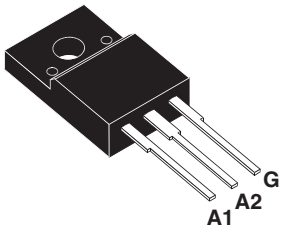

ISOWATT220AB
(Plastic)

DESCRIPTION

Based on ST' Snubberless technology providing high commutation performances, the T620-600W/800W & T630-600W/800W are specially recommended for use on inductive loads, thanks to their high commutation performances, such as rice cookers. They comply with UL standards (ref. E81734).

ABSOLUTE RATINGS (limiting values)

Symbol	Parameter			Value	Unit
$I_{T(RMS)}$	RMS on-state current (Full sine wave)		Tc= 105°C	6	A
I_{TSM}	Non repetitive surge peak on-state current (Full cycle, T_j initial = 25°C)	F = 50Hz	t = 20ms	80	A
		F = 60Hz	t = 16.7ms	84	
I^2t	I^2t Value for fusing	tp = 10 ms		36	A^2s
dI/dt	Critical rate of rise of on-state current I_G = 2 x I_{GT}, tr ≤ 100ns	F = 120 Hz	Tj = 125°C	50	A/µs
V_{DSM}/V_{RSM}	Non repetitive surge peak off-state voltage	tp = 10ms	Tj = 25°C	V_{DRM}/V_{RRM} + 100	V
I_{GM}	Peak gate current	tp = 20µs	Tj = 125°C	4	A
$P_{G(AV)}$	Average gate power dissipation		Tj = 125°C	1	W
T_{stg} T_j	Storage junction temperature range Operating junction temperature range			- 40 to + 150 - 40 to + 125	°C

ELECTRICAL CHARACTERISTICS (Tj = 25°C, unless otherwise specified)

Symbol	Test Conditions	Quadrant		T620	T630	Unit
I_{GT} (1)	V_D=12V R_L=30Ω	I-II-III	MAX.	20	30	mA
V_{GT}		I-II-III	MAX.	1.3		V
V_{GD}	V_D=V_{DRM} R_L=3.3kΩ Tj = 125°C	I-II-III	MIN.	0.2		V
I_H (2)	I_T= 100mA		MAX.	35	50	mA
I_L	I_G = 1.2I_{GT}	I - III	MAX.	50	70	mA
		II	MAX.	60	80	mA
dV/dt (2)	V_D=67% V_{DRM} Gate open Tj = 125°C		MIN.	300	500	V/µs
(dI/dt)c (2)	Without snubber Tj = 125°C		MIN.	3.3	4.5	A/ms

STATIC CHARACTERISTICS

Symbol	Test Conditions			Value	Unit
V_{TM} (2)	I_{TM} = 8.5 A tp = 380µs	Tj = 25°C	MAX.	1.4	V
V_{TO} (2)	Threshold voltage	Tj = 125°C	MAX.	0.85	V
R_d (2)	Dynamic resistance	Tj = 125°C	MAX.	50	mΩ
I_{DRM} I_{RRM}	V_{DRM} = V_{RRM}	Tj = 25°C Tj = 125°C	MAX	5 1	µA mA

Note 1: Minimum IGT is guaranted at 5% of IGT max.

Note 2: For both polarities of A2 referenced to A1.

THERMAL RESISTANCES

Symbol	Parameter	Value	Unit
Rth(j-a)	Junction to ambient	50	°C/W
Rth(j-c)	Junction to case for A.C (360° conduction angle)	3.4	°C/W

PRODUCT SELECTOR

Part Number	Voltage	Sensitivity	Type	Package
T620-600W	600V	20 mA	Snubberless	ISOWATT220AB
T620-800W	800V	20 mA	Snubberless	ISOWATT220AB
T630-600W	600V	30 mA	Snubberless	ISOWATT220AB
T630-800W	800V	30 mA	Snubberless	ISOWATT220AB

ORDERING INFORMATION

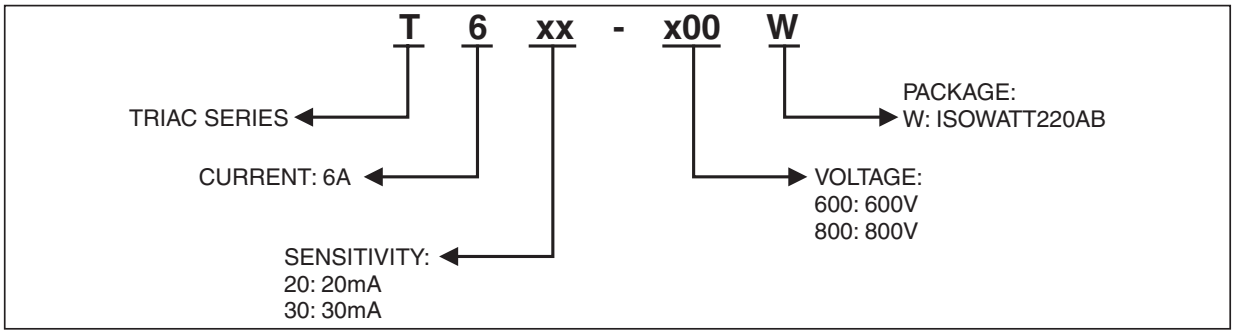

OTHER INFORMATION

Part Number	Marking	Weight	Base quantity	Packing mode
T620-600W	T620600W	2.3 g	50	Tube
T620-800W	T620800W	2.3 g	50	Tube
T630-600W	T630600W	2.3 g	50	Tube
T630-800W	T630800W	2.3 g	50	Tube

Fig. 1: Maximum power dissipation versus RMS on-state current.

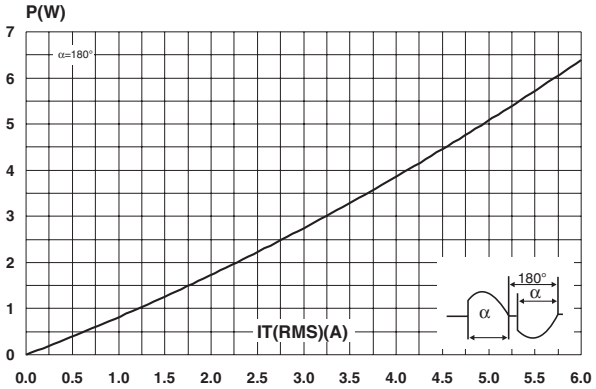

Fig. 2: RMS on-state current versus case temperature.

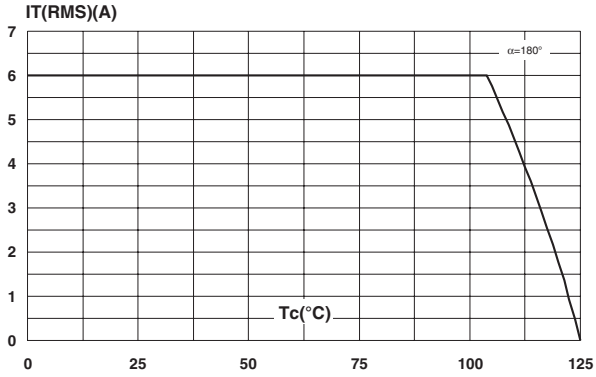

Fig. 3: Relative variation of thermal impedance versus pulse duration.

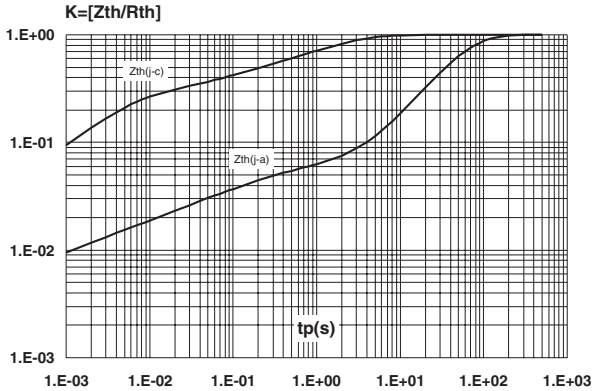

Fig. 4: On-state characteristics (maximum values).

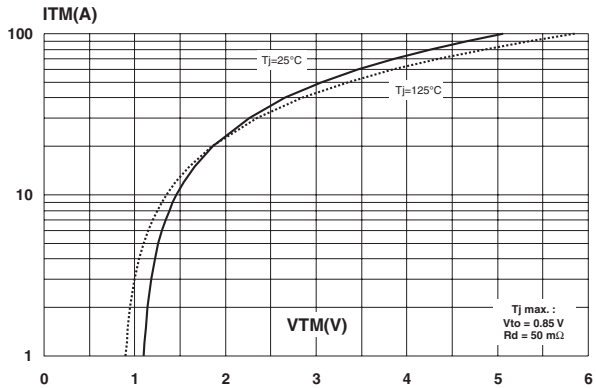

Fig. 5: Surge peak on-state current versus number of cycles.

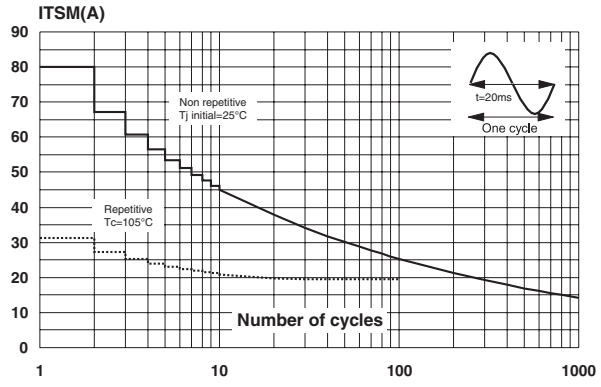

Fig. 6: Non repetitive surge peak on-state current for a sinusoidal pulse with width tp<10ms, and corresponding value of I^2t.

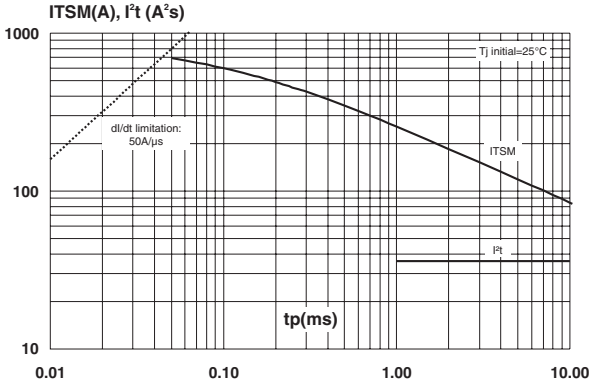

Fig. 7: Relative variation of gate trigger current, holding current and latching current versus junction temperature (typical values).

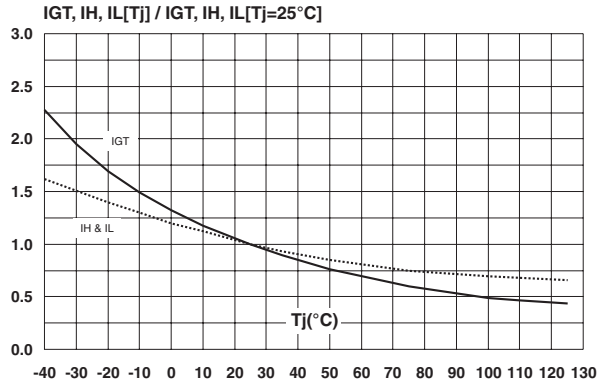

Fig. 8: Relative variation of critical rate of decrease of main current versus reapplied dV/dt (typical values).

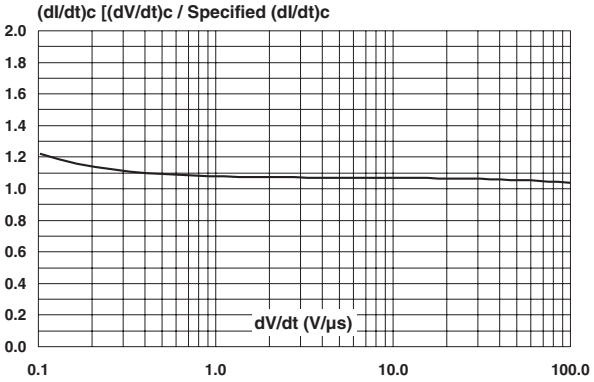

Fig. 9: Relative variation of critical rate of decrease of main current versus junction temperature.

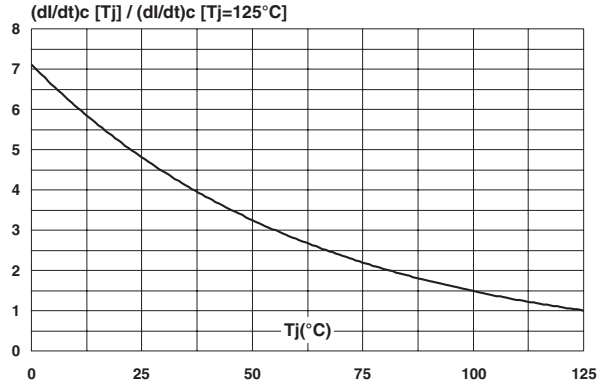

PACKAGE MECHANICAL DATA

ISOWATT220AB

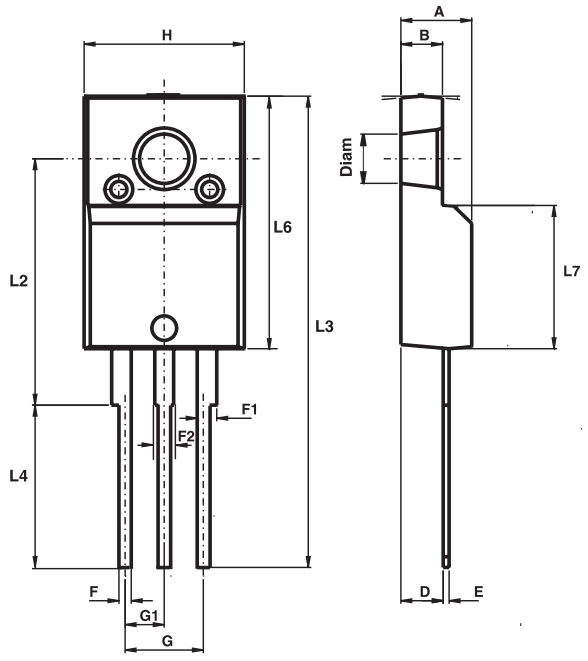

REF.	DIMENSIONS			
	Millimeters		Inches	
	Min.	Max.	Min.	Max.
A	4.40	4.60	0.173	0.181
B	2.50	2.70	0.098	0.106
D	2.50	2.75	0.098	0.108
E	0.40	0.70	0.016	0.028
F	0.75	1.00	0.030	0.039
F1	1.15	1.70	0.045	0.067
F2	1.15	1.70	0.045	0.067
G	4.95	5.20	0.195	0.205
G1	2.40	2.70	0.094	0.106
H	10.00	10.40	0.394	0.409
L2	16.00 typ.		0.630 typ.	
L3	28.60	30.60	1.125	1.205
L4	9.80	10.60	0.386	0.417
L6	15.90	16.40	0.626	0.646
L7	9.00	9.30	0.354	0.366
Diam	3.00	3.20	0.118	0.126

- Cooling method : C
- Recommended torque value : 0.55 m.N.
- Maximum torque value : 0.70 m.N.

Information furnished is believed to be accurate and reliable. However, STMicroelectronics assumes no responsibility for the consequences of use of such information nor for any infringement of patents or other rights of third parties which may result from its use. No license is granted by implication or otherwise under any patent or patent rights of STMicroelectronics. Specifications mentioned in this publication are subject to change without notice. This publication supersedes and replaces all information previously supplied. STMicroelectronics products are not authorized for use as critical components in life support devices or systems without express written approval of STMicroelectronics.

The ST logo is a registered trademark of STMicroelectronics.

All other names are the property of their respective owners.

© 2004 STMicroelectronics - All rights reserved.

STMicroelectronics GROUP OF COMPANIES

Australia - Belgium - Brazil - Canada - China - Czech Republic - Finland - France - Germany - Hong Kong - India - Israel - Italy - Japan - Malaysia - Malta - Morocco - Singapore - Spain - Sweden - Switzerland - United Kingdom - United States

www.st.com